Mechanical:

REV.	ECN NO.	DESCRIPTION	DATE	APPD
A	REL		2007-10-04	

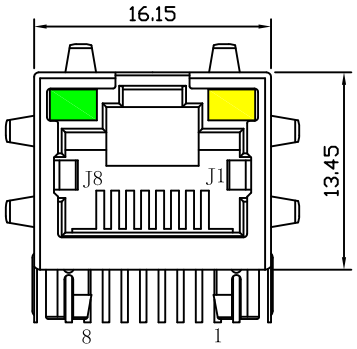

Front Side View

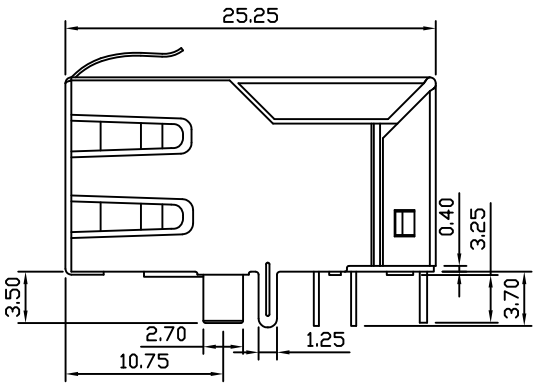

Left Side View

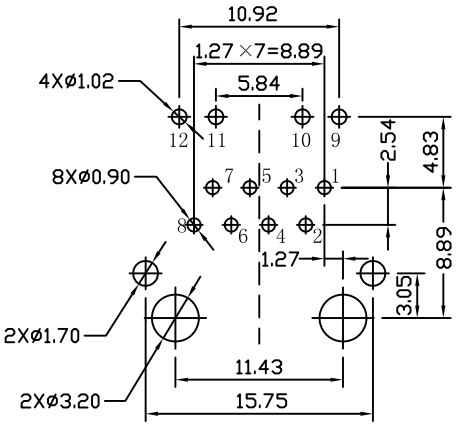

Suggested PCB Layout(Top View)

RoHS
2011/65/EU

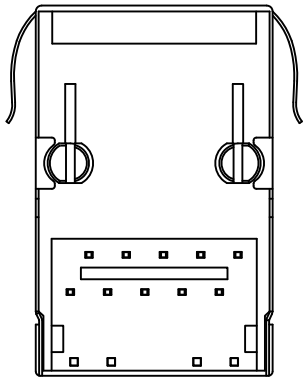

Bottow Side View

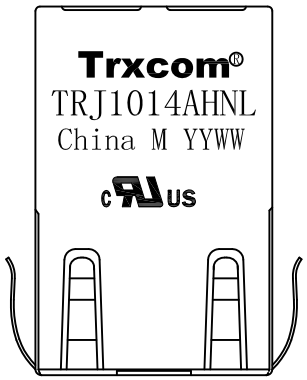

Top Side View

NOTES:

1. Designed to support application, such as SOHO(ADSL modems), LAN-on-Motherboard(LOM), hub and Switches.
2. Meets IEEE 802.3 specification
3. Connector Materials:
   Housing: Thermoplastic PBT+30%G.F UL94V-0
   Contact: Phosphor Bronze C5210R-EH Thickness=0.35mm
   Pins: Brass C2680R-H Thickness=0.35mm
   Shield: SUS 201-1/2H Thickness=0.2mm
   Contact plating: Gold 6 micro-inches min. In contact area.
4. Wave solder tip temperature: 265℃ Max, 5 Sec.
5. UL Certification: File Number E321120

X:X ±0.25	APPD:	**Trxcom** Huizhou Trxcom Electronics Co., Ltd.	
X:XX ±0.20	CHKD:	TITLE: RJ45 Connector with 10/100 Base-T Integrated Magnetics	
X:XXX ±0.05	DR: SEA	PART NO.: TRJ1014AHNL	
ANGLES ±1°	UNIT: mm	SCALE: 2/1	SHEET: 1/4
REV: A	DWG NO.: TRC07100405		

Schematic:

REV.	ECN NO.	DESCRIPTION	DATE	APPD
A	REL		2007-10-04	

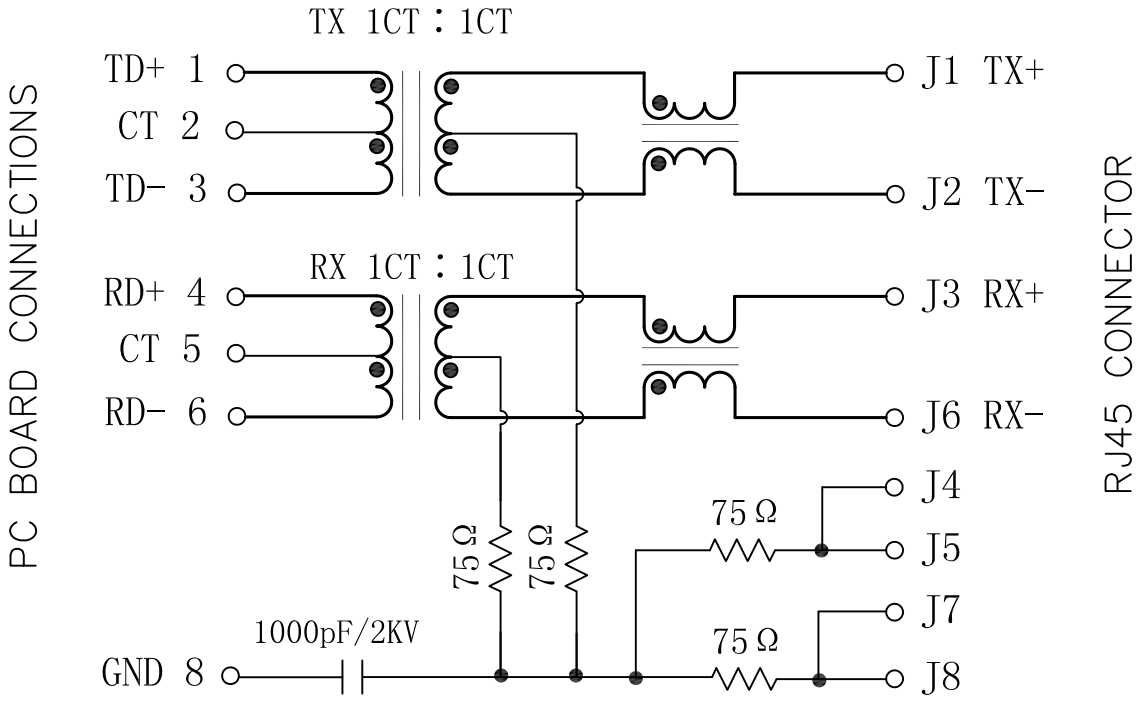

ELECTRICAL SPECFICATIONS @25℃

1. Turn Ratio(±3%):
   TX=1CT:1CT RX=1CT:1CT
2. Inductance OCL:
   350uH Min @100KHz 0.1V 8mA DC Bias
3. DCR: 1.2Ω Max
4. Insertion Loss:
   -1.2dB Max @1～65MHz
5. Return Loss:
   -18dB Min @1～30MHz
   -15dB Min @30～60MHz
   -12dB Min @60～100MHz
6. Cross talk:
   -40dB Min @30MHz
   -35dB Min @60MHz
   -30dB Min @100MHz
7. Common Mode Rejection:
   -30dB Min @1～50MHz
   -20dB Min @50～150MHz
8. Operating Voltage: 3.3-5V Max.
   Current: 350mA.
9. Hipot Test: 1500Vrms
10. Operating Temperature Range: 0℃～70℃.

RoHS 2011/65/EU

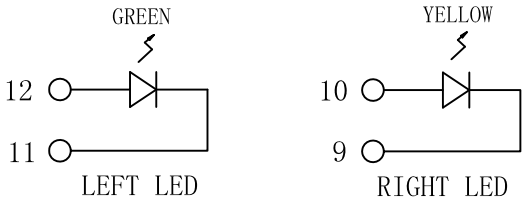

Emitting Color	λp(nm)	VF@IF=20mA	IR @VR=5V
GREEN	565	1.8~2.6V	10μA max
YELLOW	585	1.8~2.6V	10μA max

X:X ±0.25	APPD:	**Trxcom** Huizhou Trxcom Electronics Co.,Ltd.	
X:XX ±0.20	CHKD:	TITLE: RJ45 Connector with 10/100 Base-T Integrated Magnetics	
X:XXX ±0.05	DR: SEA		
ANGLES ±1°	UNIT: mm	PART NO.: TRJ1014AHNL	
	SCALE: 2/1	SHEET: 2/4	REV: A DWG NO.: TRC07100405

Profile of wave solder:

REV.	ECN NO.	DESCRIPTION	DATE	APPD
A	REL		2007-10-04	

SUGGESTED PROFILE OF WAVE SOLDER FOR ROHS PRODUCT

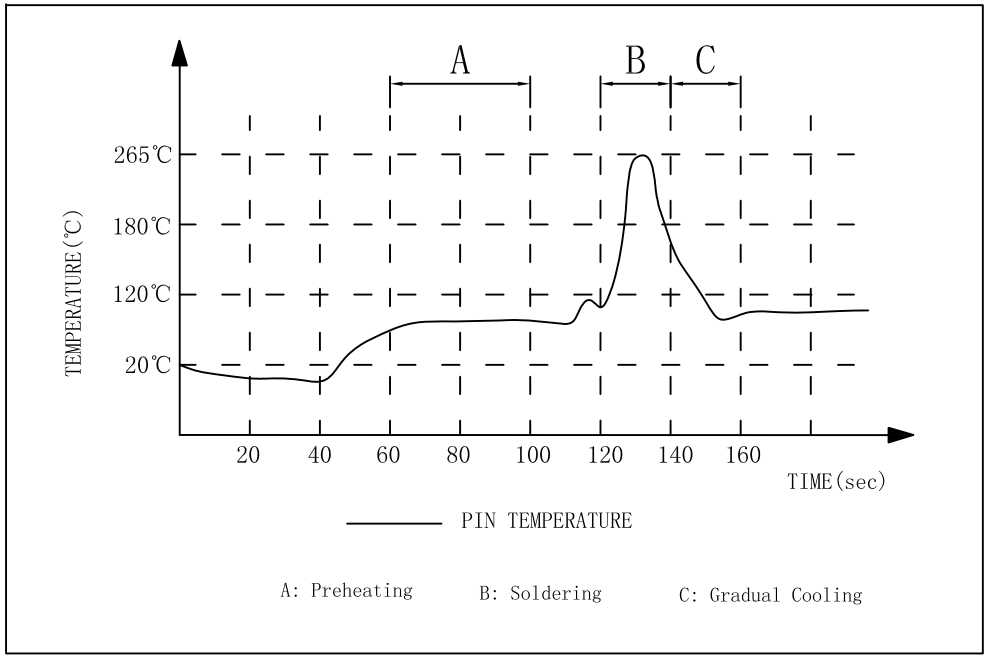

RoHS 2011/65/EU

(1) Tip Temperature: 265℃ max
(2) Tip Temperature time: 5sec max
Note: The melting point of Tin: 219℃

X:X ±0.25	APPD:	**Trxcom** Huizhou Trxcom Electronics Co.,Ltd.	
X:XX ±0.20	CHKD:	TITLE: RJ45 Connector with 10/100 Base-T Integrated Magnetics	
X:XXX ±0.05	DR: SEA		
ANGLES ±1°	UNIT: mm	PART NO.: TRJ1014AHNL	
	SCALE: 2/1	SHEET: 3/4	REV: A DWG NO.: TRC07100405

Packaging:

REV.	ECN NO.	DESCRIPTION	DATE	APPD
A	REL		2007-10-04	

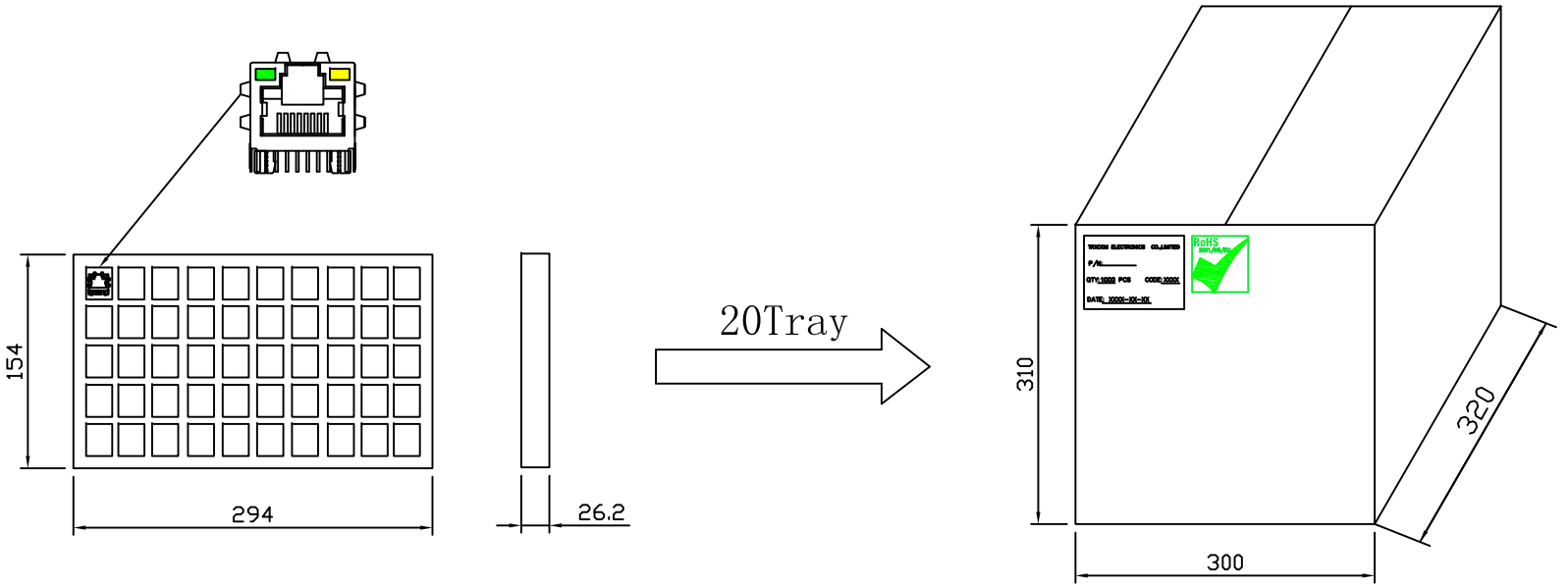

- Packaging unit: 50pcs/tray
- Packaging material: PVC
- Outer carton unit: 1000pcs/20tray/box
- Net Weight: 7kg
- Gross Weight: 9kg

X:X ±0.25	APPD:	**Trxcom** Huizhou Trxcom Electronics Co.,Ltd.	
X:XX ±0.20	CHKD:	TITLE: 1*1 25.25mm RJ45 Packing	
X:XXX ±0.05	DR: SEA		
ANGLES ±1°	UNIT: mm	PART NO.: TRJ1014AHNL	
	SCALE: 2/1	SHEET: 4/4	REV: A	DWG NO.: TRC07100405