MIC6211

Operational Amplifier

Features

- 4V to 32V Operation
- Small Footprint Package
- Unity Gain Stable
- 2.5 MHz Unity Gain Bandwidth
- Rail-to-Rail Output
- 6 V/µs Typical Slew Rate
- Short Circuit Protected

Applications

- Analog Blocks
- Data Acquisition
- Sensor Interface
- Portable Instrumentation
- Active Filtering

General Description

The MIC6211 op amp is a general-purpose, high performance, single- or split-supply, operational amplifier in a space-saving, surface-mount package.

The MIC6211 operates from 4V to 32V, single or differential (split) supply. The input common-mode range includes ground. The device features a 2.5 MHz unity gain bandwidth, 6 V/µs slew rate, and is internally unity-gain compensated.

Inputs are protected against reverse polarity (input voltage less than V–) and ESD (electrostatic discharge). Output is current-limited for both sourcing and sinking. Output short-circuits of unlimited duration are allowed, provided the power dissipation specification is not exceeded.

The MIC6211 is available in the tiny, 5-lead SOT-23-5 surface-mount package.

Package Type

Pin Configuration

SOT23–5 (M5)

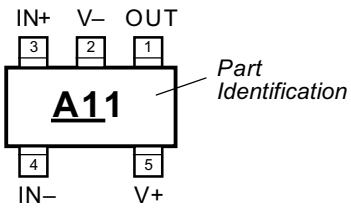

Functional Configuration

SOT23–5 (M5)

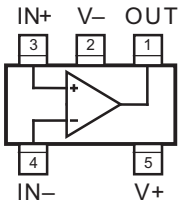

© 2020 Microchip Technology Inc.

Functional Diagram

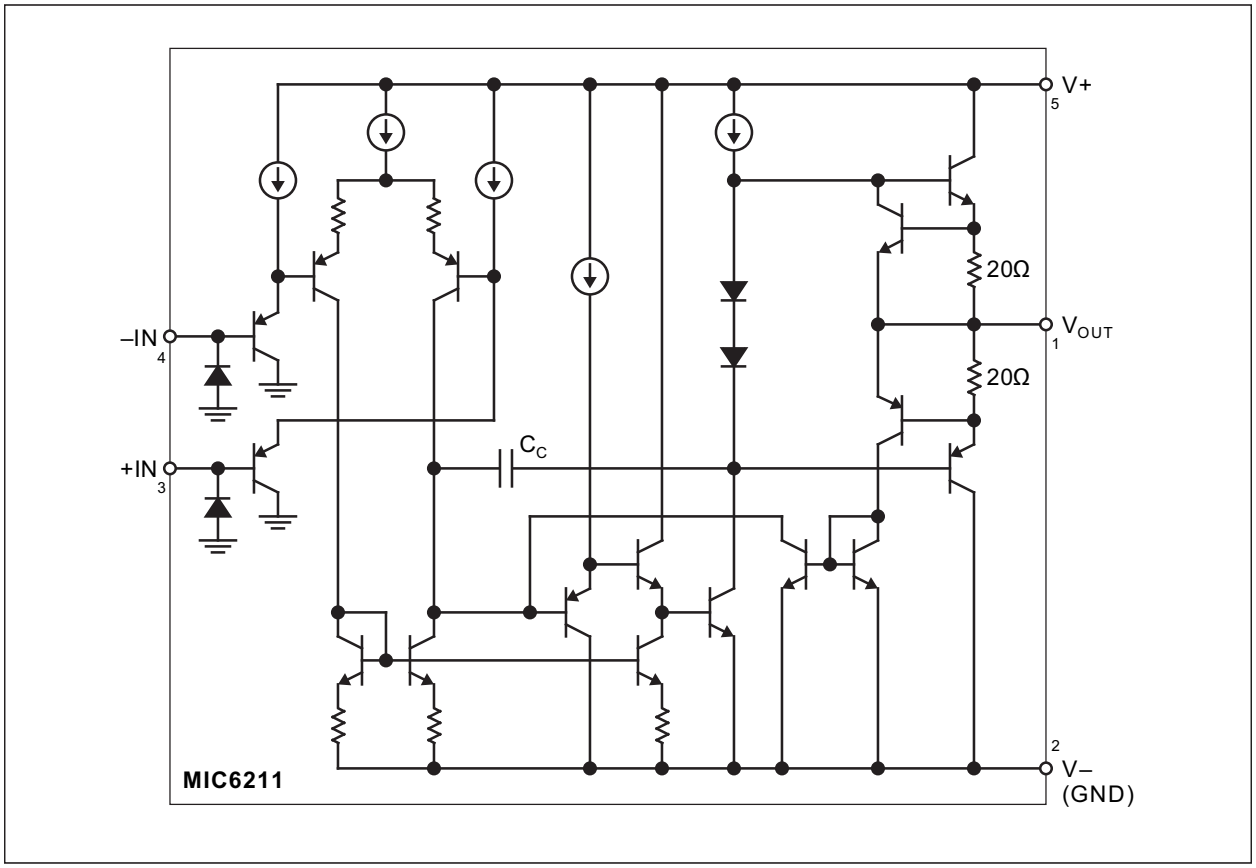

© 2020 Microchip Technology Inc.

1.0 ELECTRICAL CHARACTERISTICS

Absolute Maximum Ratings †

Supply Voltage (V_{V+} to V_{V-}) ..... 36V or ±18V
Differential Input Voltage (V_{IN+} to V_{IN-}) ..... ±36V
Input Voltage (V_{IN+}, V_{IN-}) ..... (V_{V-} – 0.3V) to V_{V+}
Output Short-Circuit Current Duration ..... Indefinite

Operating Ratings ‡

Supply Voltage (V+ to V-) ..... +4V to +32V

† Notice: Stresses above those listed under “Absolute Maximum Ratings” may cause permanent damage to the device. This is a stress rating only and functional operation of the device at those or any other conditions above those indicated in the operational sections of this specification is not intended. Exposure to maximum rating conditions for extended periods may affect device reliability.

‡ Notice: The device is not guaranteed to function outside the operating ratings.

© 2020 Microchip Technology Inc.

ELECTRICAL CHARACTERISTICS (DIFFERENTIAL SUPPLY)

Electrical Characteristics: V+ = +15V, V– = –15V V_{CM} = 0V; R_L = 2 kΩ; T_A = 25°C, T_A= T_J; unless otherwise noted.

Parameters	Symbol	Min.	Typ.	Max.	Units	Conditions
Input Offset Voltage	V_{OS}	—	2	7	mV	—
Average Input Offset Drift	TCV_{OS}	—	7	—	µV/°C	(Note 1)
Input Bias Current	I_B	—	50	250	nA	—
Input Offset Current	I_{OS}	—	8	30	nA	—
Input Voltage Range	V_{CM}	+13.5	+13.8	—	V	—
		-15.0	-15.3			
Common-Mode Rejection Ratio	CMRR	65	100	—	dB	V_{CM} = +13.5V, -15.0V
Power Supply Rejection Ratio	PSRR	65	110	—	dB	V_S = ±2.5V to ±15V
Large-Signal Voltage Gain	A_{VOL}	25	180	—	V/mV	V_O = ±10V
Maximum Output Voltage Swing	V_{OUT}	±12.5	±14	—	V	—
Bandwidth	B_W	—	2.5	—	MHz	—
Slew Rate	S_R	—	6	—	V/µs	—
Short-Circuit Output Current	I_{SC}	30	50	—	mA	Sourcing or Sinking
Supply Current	I_S	—	1.3	2.0	mA	—

Note 1: Not production tested.

© 2020 Microchip Technology Inc.

ELECTRICAL CHARACTERISTICS (SINGLE SUPPLY)

Electrical Characteristics: V+ = +5V, V- = 0V, V_{CM} = 0.1V; T_A = 25°C, T_A= T_J; unless otherwise noted.

Parameters	Symbol	Min.	Typ.	Max.	Units	Conditions
Input Offset Voltage	V_{OS}	—	2	7	mV	—
Average Input Offset Drift	TCV_{OS}	—	7	—	µV/°C	(Note 1)
Input Bias Current	I_B	—	65	250	nA	—
Input Offset Current	I_{OS}	—	8	30	nA	—
Input Voltage Range	V_{CM}	+3.5	+3.7	—	V	
		0	-0.3			
Common-Mode Rejection Ratio	CMRR	45	70	—	dB	V_{CM} = 0V to 3.5V
Power Supply Rejection Ratio	PSRR	65	105	—	dB	V_S = ±2.5V to ±15V
Large-Signal Voltage Gain	A_{VOL}	15	170	—	V/mV	V_O = 1.5V to 3.5V, R_L = 2 kΩ
Maximum Output Voltage Swing	V_{OUT}	±3.8	+4.0	—	V	R_L = 10 kΩ to GND
			+1.0	+1.2		R_L = 10 kΩ to +5V
Short-Circuit Output Current	I_{SC}	20	40	—	mA	Sourcing or Sinking
Supply Current	I_S	—	1.2	1.8	mA	—

Note 1: Not production tested.

TEMPERATURE SPECIFICATIONS (Note 1)

Parameters	Symbol	Min.	Typ.	Max.	Units	Conditions
Temperature Ranges						
Ambient Temperature Range	T_A	–40	—	+85	°C	—
Package Thermal Resistance						
Thermal Resistance SOT-23-5	θ_{JA}	—	200	—	°C/W	Mounted to PCB

Note 1: The maximum allowable power dissipation is a function of ambient temperature, the maximum allowable junction temperature and the thermal resistance from junction to air (i.e., T_A, T_J, θ_{JA}). Exceeding the maximum allowable power dissipation will cause the device operating junction temperature to exceed the maximum +85°C rating. Sustained junction temperatures above +85°C can impact the device reliability.

© 2020 Microchip Technology Inc.

2.0 TYPICAL PERFORMANCE CURVES

Note: The graphs and tables provided following this note are a statistical summary based on a limited number of samples and are provided for informational purposes only. The performance characteristics listed herein are not tested or guaranteed. In some graphs or tables, the data presented may be outside the specified operating range (e.g., outside specified power supply range) and therefore outside the warranted range.

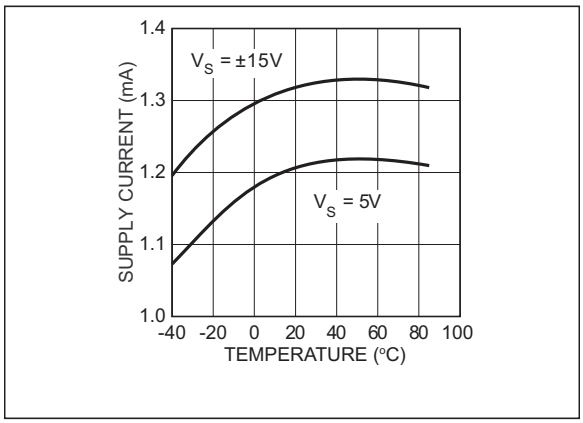

FIGURE 2-1: *Supply Current vs. Temperature.*

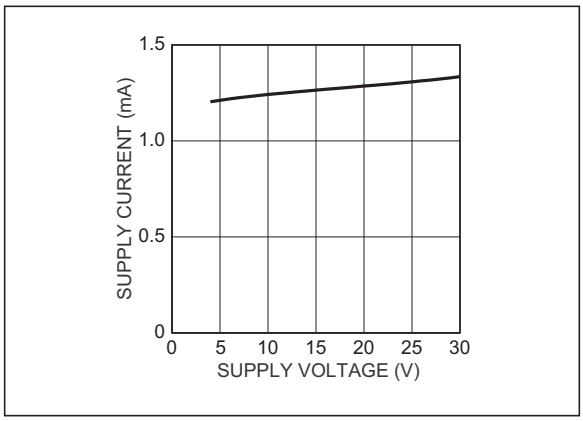

FIGURE 2-4: *Supply Current vs. Supply Voltage.*

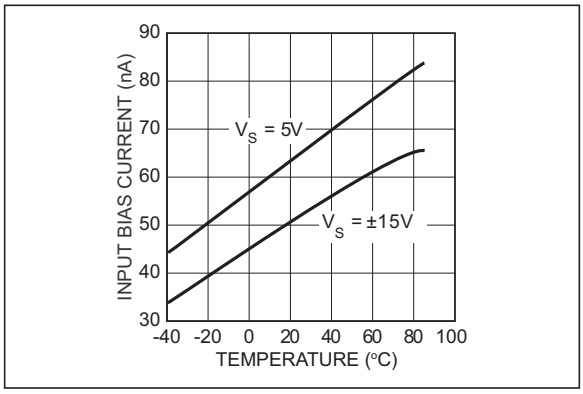

FIGURE 2-2: *Input Bias Current vs. Temperature.*

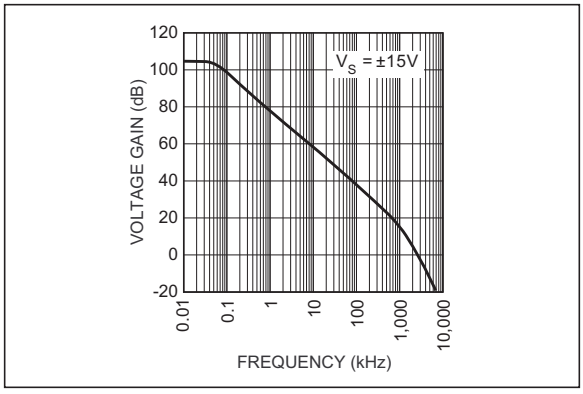

FIGURE 2-5: *Voltage Gain vs. Frequency.*

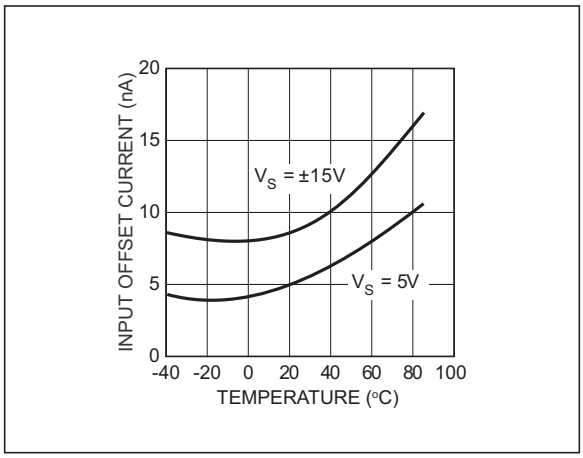

FIGURE 2-3: *Input Offset Current vs. Temperature.*

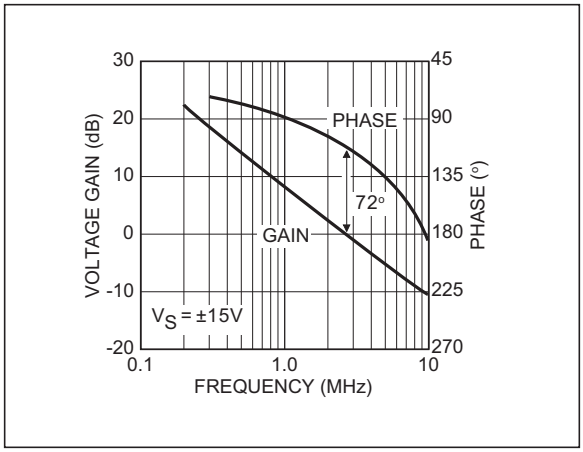

FIGURE 2-6: *Gain and Phase vs. Frequency.*

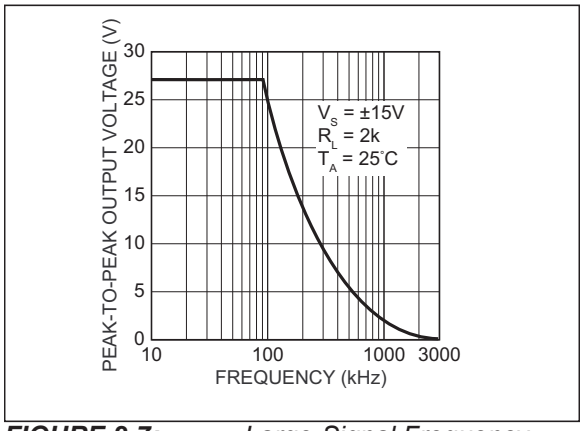

FIGURE 2-7: *Large-Signal Frequency Response.*

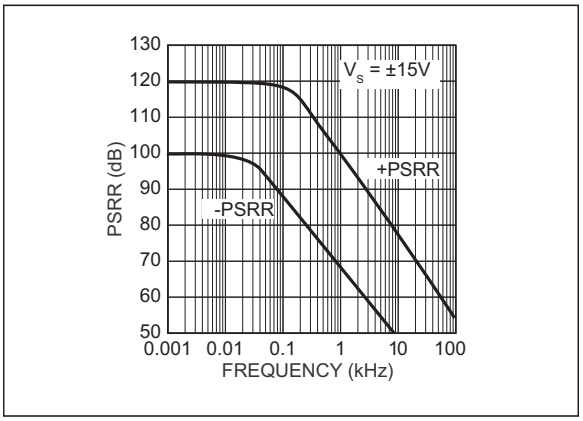

FIGURE 2-9: *Power Supply Rejection Ratio vs. Frequency.*

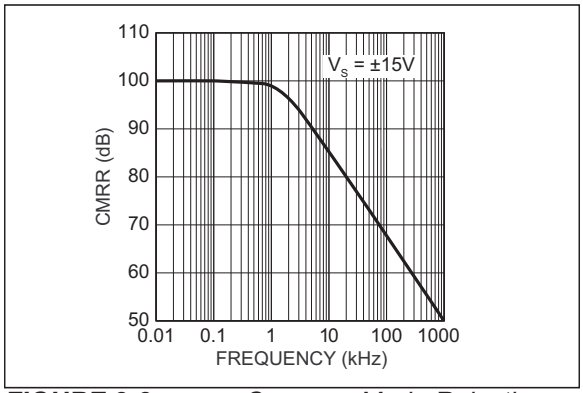

FIGURE 2-8: *Common Mode Rejection Ratio vs. Frequency.*

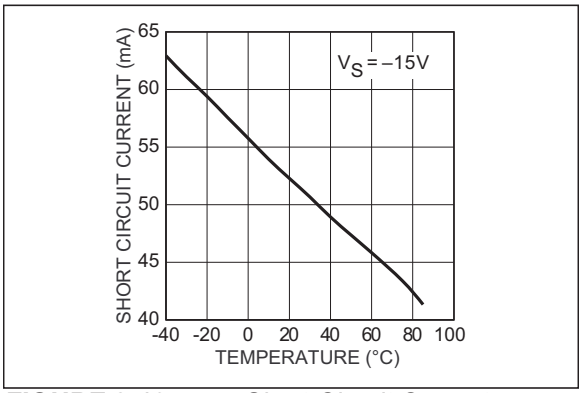

FIGURE 2-10: *Short-Circuit Current vs. Temperature.*

© 2020 Microchip Technology Inc.

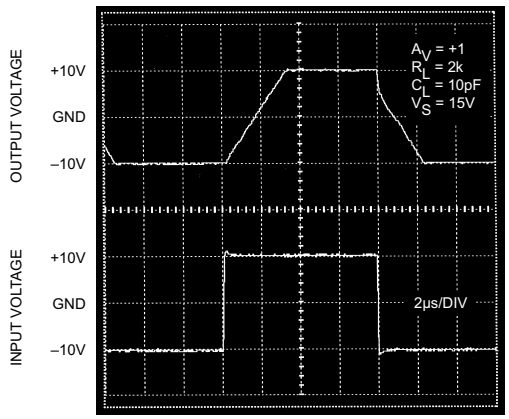

FIGURE 2-11: *Large-Signal Transient Response.*

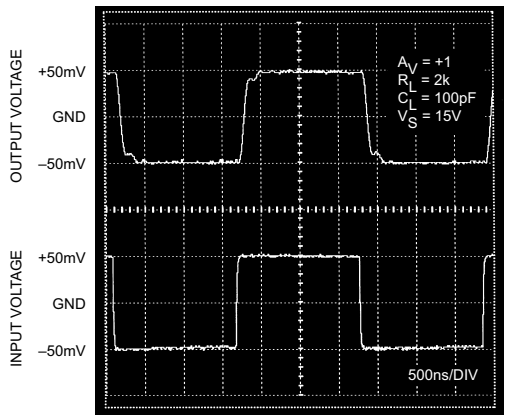

FIGURE 2-12: *Small-Signal Transient Response.*

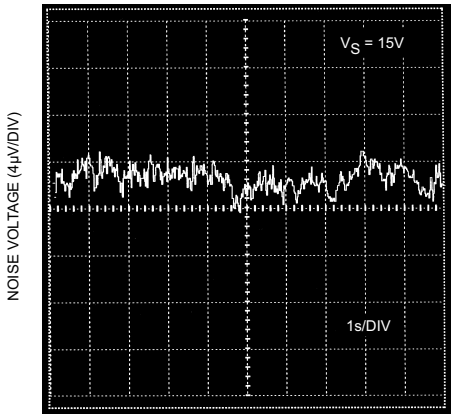

FIGURE 2-13: *0.1 Hz to 10 Hz Noise.*

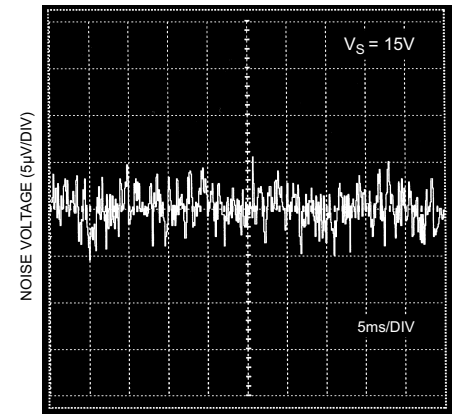

FIGURE 2-14: *Wideband Noise.*

3.0 PIN DESCRIPTIONS

The descriptions of the pins are listed in Table 3-1.

TABLE 3-1: PIN FUNCTION TABLE

Pin Number	Symbol	Description
1	OUT	Amplifier Output.
2	V–	Negative Supply. Negative supply for split supply application or ground for single supply application.
3	IN+	Non-Inverting Input.
4	IN–	Inverting Input.
5	V+	Positive Supply.

© 2020 Microchip Technology Inc.

4.0 APPLICATION INFORMATION

4.1 Common-Mode Range and Output Voltage

The input common-mode range of the MIC6211 is from the negative supply voltage to 1.2V below the positive supply voltage. The output voltage swings within 1V of the positive and negative supply voltage.

4.2 Voltage Buffer

Figure 4-1 shows a standard voltage follower/buffer. The output voltage equals the input voltage. This circuit is used to buffer a high impedance signal source. This circuit works equally well with single or split supplies.

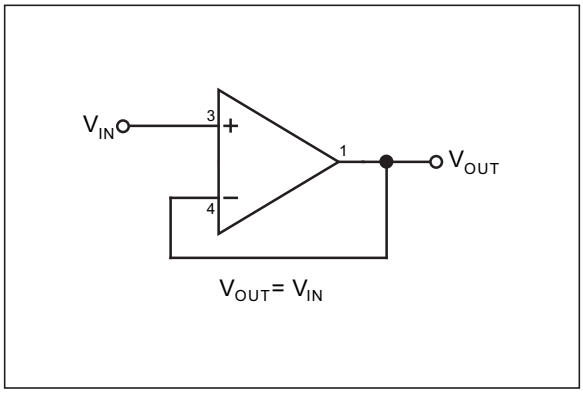

FIGURE 4-1: *Voltage Buffer.*

4.3 Inverting Amplifier

Figure 4-2 shows an inverting amplifier with its gain set by the ratio of two resistors. This circuit works best with split supplies, but will perform with single supply systems if the non-inverting input (+ input) is biased up above ground.

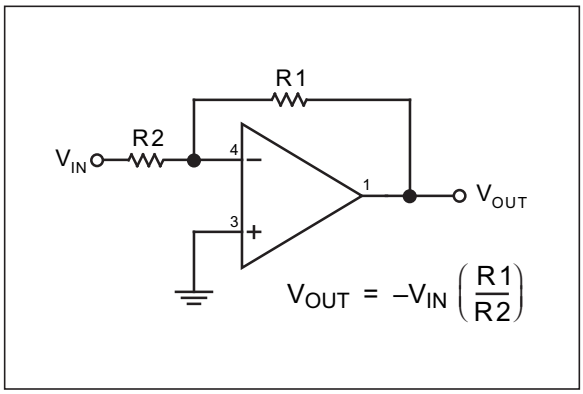

FIGURE 4-2: *Inverting Amplifier.*

4.4 Voltage Controlled Current Sink

Figure 4-3 is a voltage controlled current sink. A buffer transistor forces current through a programming resistor until the feedback loop is satisfied. Current flow is V_{IN}/R. This circuit works with single or split supplies.

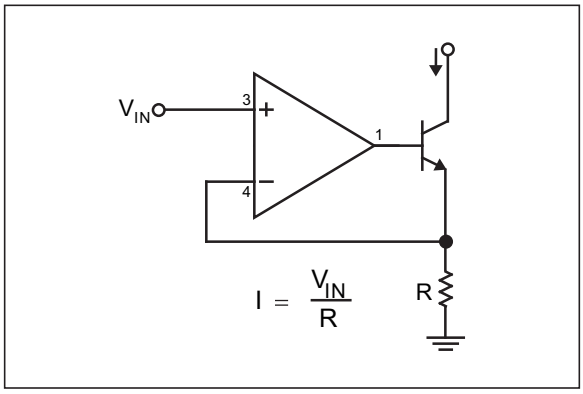

FIGURE 4-3: *Voltage Controlled Current Sink.*

4.5 High-Pass Filter

Figure 4-4 is an active filter with 20 dB (10×) gain and a low frequency cutoff of 10 Hz. The high gain-bandwidth of the MIC6211 allows operation beyond 100 kHz. This filter configuration is designed for split supplies.

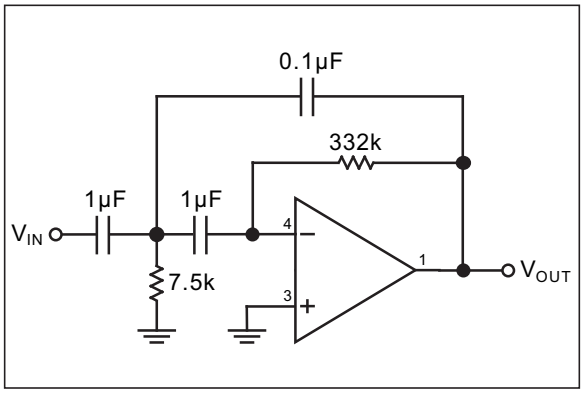

FIGURE 4-4: *High–Pass Filter.*

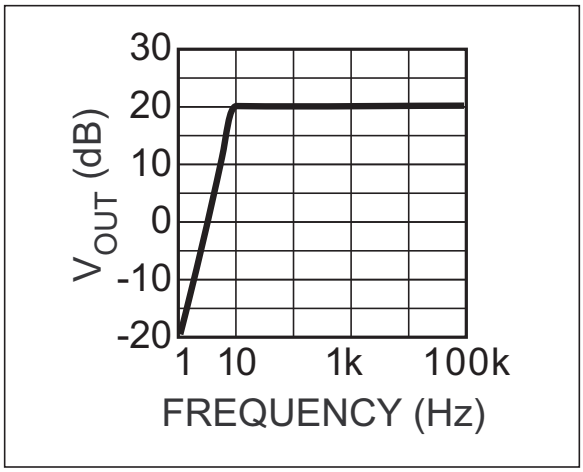

FIGURE 4-5: *High-Pass Filter Response.*

4.6 Summing Amplifier

Figure 4-5 is a single supply summing amplifier. In this configuration, the output voltage is the sum of V1 and V2, minus the sum of V3 and V4. By adding more resistors to either the inverting or non-inverting input, more voltages may be summed. This single supply version has one important restriction: the sum of V1 and V2 must exceed the sum of V3 and V4, since the output voltage cannot pull below zero with only a single supply.

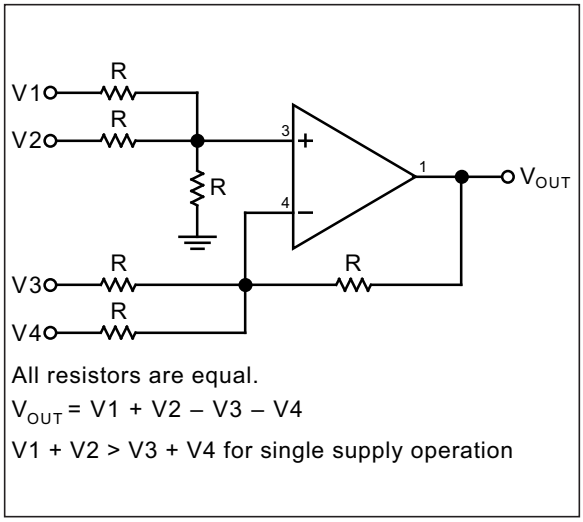

FIGURE 4-6: *Summing Amplifier.*

© 2020 Microchip Technology Inc.

5.0 PACKAGING INFORMATION

5.1 Package Marking Information

5-Lead SOT-23* (Front)	Example
XXX	A11

5-Lead SOT-23* (Back)	Example
NNN	469

Legend:	XX...X	Product code or customer-specific information
	Y	Year code (last digit of calendar year)
	YY	Year code (last 2 digits of calendar year)
	WW	Week code (week of January 1 is week ‘01’)
	NNN	Alphanumeric traceability code
	e3	Pb-free JEDEC® designator for Matte Tin (Sn)
	*	This package is Pb-free. The Pb-free JEDEC designator (e3) can be found on the outer packaging for this package.
	●, ▲, ▼	Pin one index is identified by a dot, delta up, or delta down (triangle mark).
Note:	In the event the full Microchip part number cannot be marked on one line, it will be carried over to the next line, thus limiting the number of available characters for customer-specific information. Package may or may not include the corporate logo.	
	Underbar (_) and/or Overbar (¯) symbol may not be to scale.	

5-Lead SOT23 Package Outline and Recommended Land Pattern

TITLE
5 LEAD SOT23 PACKAGE OUTLINE & RECOMMENDED LAND PATTERN

DRAWING #	SOT23-5LD-PL-1	UNIT	MM

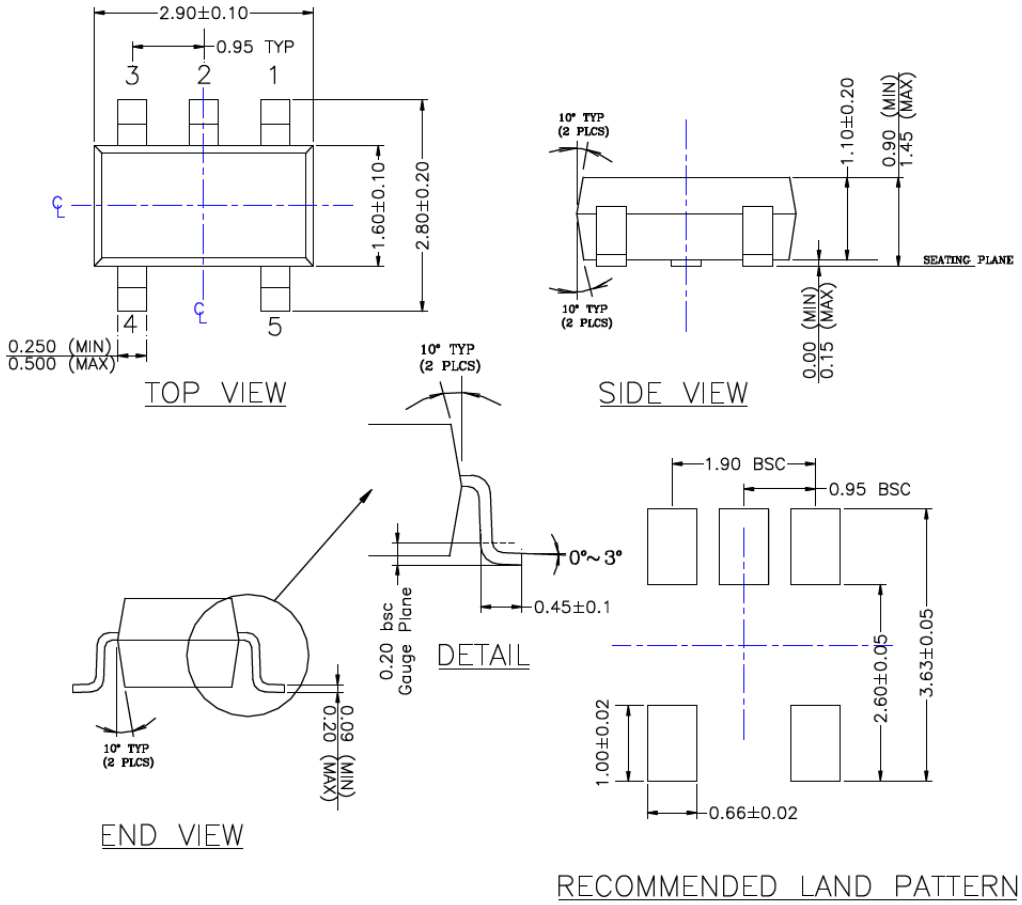

NOTE:
1. PACKAGE OUTLINE EXCLUSIVE OF MOLD FLASH & BURR.
2. PACKAGE OUTLINE INCLUSIVE OF SOLER PLATING.
3. DIMENSION AND TOLERANCE PER ANSI Y14.5M, 1982.
4. FOOT LENGTH MEASUREMENT BASED ON GAUGE PLANE METHOD.
5. DIE FACES UP FOR MOLD, AND FACES DOWN FOR TRIM/FORM.
6. ALL DIMENSIONS ARE IN MILLIMETERS.

Note: For the most current package drawings, please see the Microchip Packaging Specification located at http://www.microchip.com/packaging.

© 2020 Microchip Technology Inc.

APPENDIX A: REVISION HISTORY

Revision A (July 2020)

- Converted Micrel document MIC6211 to Microchip data sheet template DS20006346A.
- Minor text changes throughout.

NOTES:

© 2020 Microchip Technology Inc.

PRODUCT IDENTIFICATION SYSTEM

To order or obtain information, e.g., on pricing or delivery, contact your local Microchip representative or sales office.

PART NO.	X	XX	-XX
Device	Temperature	Package	Media Type

Device:	MIC6211:	Operational Amplifier	
Temperature:	Y	=	–40°C to +85°C
Package:	M5	=	5-Lead SOT-23
Media Type:	TR	=	3,000/Reel

Examples:

a) MIC6211YM5-TR: Op Amp, –40°C to +85°C Junction Temperature Range, 5-Lead SOT-23 Package, 3,000/Reel

Note 1: Tape and Reel identifier only appears in the catalog part number description. This identifier is used for ordering purposes and is not printed on the device package. Check with your Microchip Sales Office for package availability with the Tape and Reel option.

NOTES:

© 2020 Microchip Technology Inc.

Note the following details of the code protection feature on Microchip devices:

- Microchip products meet the specification contained in their particular Microchip Data Sheet.
- Microchip believes that its family of products is one of the most secure families of its kind on the market today, when used in the intended manner and under normal conditions.
- There are dishonest and possibly illegal methods used to breach the code protection feature. All of these methods, to our knowledge, require using the Microchip products in a manner outside the operating specifications contained in Microchip's Data Sheets. Most likely, the person doing so is engaged in theft of intellectual property.
- Microchip is willing to work with the customer who is concerned about the integrity of their code.
- Neither Microchip nor any other semiconductor manufacturer can guarantee the security of their code. Code protection does not mean that we are guaranteeing the product as "unbreakable."

Code protection is constantly evolving. We at Microchip are committed to continuously improving the code protection features of our products. Attempts to break Microchip's code protection feature may be a violation of the Digital Millennium Copyright Act. If such acts allow unauthorized access to your software or other copyrighted work, you may have a right to sue for relief under that Act.

Information contained in this publication regarding device applications and the like is provided only for your convenience and may be superseded by updates. It is your responsibility to ensure that your application meets with your specifications. MICROCHIP MAKES NO REPRESENTATIONS OR WARRANTIES OF ANY KIND WHETHER EXPRESS OR IMPLIED, WRITTEN OR ORAL, STATUTORY OR OTHERWISE, RELATED TO THE INFORMATION, INCLUDING BUT NOT LIMITED TO ITS CONDITION, QUALITY, PERFORMANCE, MERCHANTABILITY OR FITNESS FOR PURPOSE**.** Microchip disclaims all liability arising from this information and its use. Use of Microchip devices in life support and/or safety applications is entirely at the buyer's risk, and the buyer agrees to defend, indemnify and hold harmless Microchip from any and all damages, claims, suits, or expenses resulting from such use. No licenses are conveyed, implicitly or otherwise, under any Microchip intellectual property rights unless otherwise stated.

For information regarding Microchip's Quality Management Systems, please visit www.microchip.com/quality.

Trademarks

The Microchip name and logo, the Microchip logo, Adaptec, AnyRate, AVR, AVR logo, AVR Freaks, BesTime, BitCloud, chipKIT, chipKIT logo, CryptoMemory, CryptoRF, dsPIC, FlashFlex, flexPWR, HELDO, IGLOO, JukeBlox, KeeLoq, Kleer, LANCheck, LinkMD, maXStylus, maXTouch, MediaLB, megaAVR, Microsemi, Microsemi logo, MOST, MOST logo, MPLAB, OptoLyzer, PackeTime, PIC, picoPower, PICSTART, PIC32 logo, PolarFire, Prochip Designer, QTouch, SAM-BA, SenGenuity, SpyNIC, SST, SST Logo, SuperFlash, Symmetricom, SyncServer, Tachyon, TempTrackr, TimeSource, tinyAVR, UNI/O, Vectron, and XMEGA are registered trademarks of Microchip Technology Incorporated in the U.S.A. and other countries.

APT, ClockWorks, The Embedded Control Solutions Company, EtherSynch, FlashTec, Hyper Speed Control, HyperLight Load, IntelliMOS, Libero, motorBench, mTouch, Powermite 3, Precision Edge, ProASIC, ProASIC Plus, ProASIC Plus logo, Quiet-Wire, SmartFusion, SyncWorld, Temux, TimeCesium, TimeHub, TimePictra, TimeProvider, Vite, WinPath, and ZL are registered trademarks of Microchip Technology Incorporated in the U.S.A.

Adjacent Key Suppression, AKS, Analog-for-the-Digital Age, Any Capacitor, AnyIn, AnyOut, BlueSky, BodyCom, CodeGuard, CryptoAuthentication, CryptoAutomotive, CryptoCompanion, CryptoController, dsPICDEM, dsPICDEM.net, Dynamic Average Matching, DAM, ECAN, EtherGREEN, In-Circuit Serial Programming, ICSP, INICnet, Inter-Chip Connectivity, JitterBlocker, KleerNet, KleerNet logo, memBrain, Mindi, MiWi, MPASM, MPF, MPLAB Certified logo, MPLIB, MPLINK, MultiTRAK, NetDetach, Omniscient Code Generation, PICDEM, PICDEM.net, PICkit, PICtail, PowerSmart, PureSilicon, QMatrix, REAL ICE, Ripple Blocker, SAM-ICE, Serial Quad I/O, SMART-I.S., SQI, SuperSwitcher, SuperSwitcher II, Total Endurance, TSHARC, USBCheck, VariSense, ViewSpan, WiperLock, Wireless DNA, and ZENA are trademarks of Microchip Technology Incorporated in the U.S.A. and other countries.

SQTP is a service mark of Microchip Technology Incorporated in the U.S.A.

The Adaptec logo, Frequency on Demand, Silicon Storage Technology, and Symmcom are registered trademarks of Microchip Technology Inc. in other countries.

GestIC is a registered trademark of Microchip Technology Germany II GmbH & Co. KG, a subsidiary of Microchip Technology Inc., in other countries.

All other trademarks mentioned herein are property of their respective companies.

© 2020, Microchip Technology Incorporated, All Rights Reserved.

ISBN: 978-1-5224-6417-4

Worldwide Sales and Service

AMERICAS

Corporate Office
2355 West Chandler Blvd.
Chandler, AZ 85224-6199
Tel: 480-792-7200
Fax: 480-792-7277
Technical Support:
http://www.microchip.com/support
Web Address:
www.microchip.com

Atlanta
Duluth, GA
Tel: 678-957-9614
Fax: 678-957-1455

Austin, TX
Tel: 512-257-3370

Boston
Westborough, MA
Tel: 774-760-0087
Fax: 774-760-0088

Chicago
Itasca, IL
Tel: 630-285-0071
Fax: 630-285-0075

Dallas
Addison, TX
Tel: 972-818-7423
Fax: 972-818-2924

Detroit
Novi, MI
Tel: 248-848-4000

Houston, TX
Tel: 281-894-5983

Indianapolis
Noblesville, IN
Tel: 317-773-8323
Fax: 317-773-5453
Tel: 317-536-2380

Los Angeles
Mission Viejo, CA
Tel: 949-462-9523
Fax: 949-462-9608
Tel: 951-273-7800

Raleigh, NC
Tel: 919-844-7510

New York, NY
Tel: 631-435-6000

San Jose, CA
Tel: 408-735-9110
Tel: 408-436-4270

Canada - Toronto
Tel: 905-695-1980
Fax: 905-695-2078

ASIA/PACIFIC

Australia - Sydney
Tel: 61-2-9868-6733

China - Beijing
Tel: 86-10-8569-7000

China - Chengdu
Tel: 86-28-8665-5511

China - Chongqing
Tel: 86-23-8980-9588

China - Dongguan
Tel: 86-769-8702-9880

China - Guangzhou
Tel: 86-20-8755-8029

China - Hangzhou
Tel: 86-571-8792-8115

China - Hong Kong SAR
Tel: 852-2943-5100

China - Nanjing
Tel: 86-25-8473-2460

China - Qingdao
Tel: 86-532-8502-7355

China - Shanghai
Tel: 86-21-3326-8000

China - Shenyang
Tel: 86-24-2334-2829

China - Shenzhen
Tel: 86-755-8864-2200

China - Suzhou
Tel: 86-186-6233-1526

China - Wuhan
Tel: 86-27-5980-5300

China - Xian
Tel: 86-29-8833-7252

China - Xiamen
Tel: 86-592-2388138

China - Zhuhai
Tel: 86-756-3210040

ASIA/PACIFIC

India - Bangalore
Tel: 91-80-3090-4444

India - New Delhi
Tel: 91-11-4160-8631

India - Pune
Tel: 91-20-4121-0141

Japan - Osaka
Tel: 81-6-6152-7160

Japan - Tokyo
Tel: 81-3-6880- 3770

Korea - Daegu
Tel: 82-53-744-4301

Korea - Seoul
Tel: 82-2-554-7200

Malaysia - Kuala Lumpur
Tel: 60-3-7651-7906

Malaysia - Penang
Tel: 60-4-227-8870

Philippines - Manila
Tel: 63-2-634-9065

Singapore
Tel: 65-6334-8870

Taiwan - Hsin Chu
Tel: 886-3-577-8366

Taiwan - Kaohsiung
Tel: 886-7-213-7830

Taiwan - Taipei
Tel: 886-2-2508-8600

Thailand - Bangkok
Tel: 66-2-694-1351

Vietnam - Ho Chi Minh
Tel: 84-28-5448-2100

EUROPE

Austria - Wels
Tel: 43-7242-2244-39
Fax: 43-7242-2244-393

Denmark - Copenhagen
Tel: 45-4485-5910
Fax: 45-4485-2829

Finland - Espoo
Tel: 358-9-4520-820

France - Paris
Tel: 33-1-69-53-63-20
Fax: 33-1-69-30-90-79

Germany - Garching
Tel: 49-8931-9700

Germany - Haan
Tel: 49-2129-3766400

Germany - Heilbronn
Tel: 49-7131-72400

Germany - Karlsruhe
Tel: 49-721-625370

Germany - Munich
Tel: 49-89-627-144-0
Fax: 49-89-627-144-44

Germany - Rosenheim
Tel: 49-8031-354-560

Israel - Ra'anana
Tel: 972-9-744-7705

Italy - Milan
Tel: 39-0331-742611
Fax: 39-0331-466781

Italy - Padova
Tel: 39-049-7625286

Netherlands - Drunen
Tel: 31-416-690399
Fax: 31-416-690340

Norway - Trondheim
Tel: 47-7288-4388

Poland - Warsaw
Tel: 48-22-3325737

Romania - Bucharest
Tel: 40-21-407-87-50

Spain - Madrid
Tel: 34-91-708-08-90
Fax: 34-91-708-08-91

Sweden - Gothenberg
Tel: 46-31-704-60-40

Sweden - Stockholm
Tel: 46-8-5090-4654

UK - Wokingham
Tel: 44-118-921-5800
Fax: 44-118-921-5820

© 2020 Microchip Technology Inc.