# SK02-111006NL

## RJ45

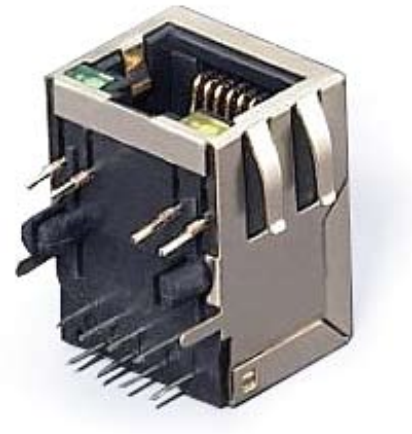

SPECIFICATIONS

ELECTRICAL
CURRENT RATING: 1.5AMPS
VOLTAGE RATING: 125V AC
INSULATION RESISTANCE: ⩾500MΩ
WITHSTANDING VOLTAGE: AC 1000V
RMS 50Hz or 60Hz 1Min
CONTACT RESITANCE: ⩽30mΩ

MECHANICAL
MATING FORCE: 5-25N
RETENTION STRENGTH: ⩾76N
DURABILITY: ⩾750 TIMES

MATERIAL
HOUSING: PA6T OR PBT FILLFD FILLED WITH FIBERGLASS
INSERT MATERIAL: PBT FILLED WITH FIBERGLASS
SHIELDING: 0.2mm THICKNESS COPPER ALLOY WITH NICKEL PLATED
CONTACT: 0.35mm THICKNESS PHOSPHOR BRONZE, HARD GOLD PLATED OVER TIN
GOLD PLATING: ＜3μ"INCH☐ 3μ"INCH☐ 6μ"INCH☑
15μ"INCH☐ 30μ"INCH☐ 50μ"INCH☐

MARKING: MARKING FOLLOW THE CUSTOMER REQUIREMENT

WORKING TEMPERATURE: -40℃ ~ 70℃

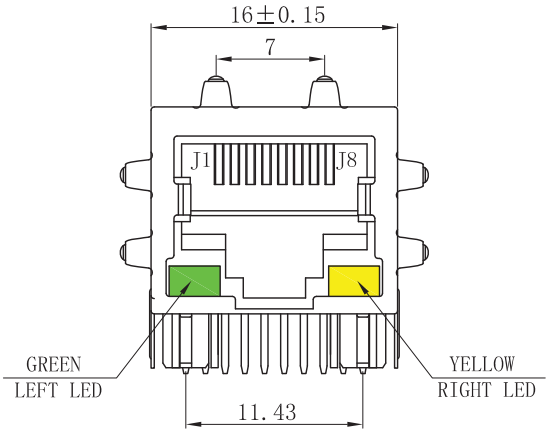


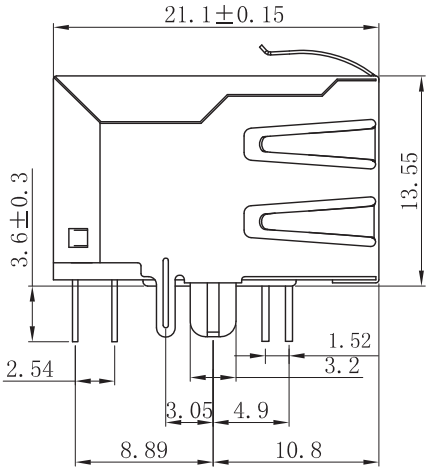


PC Board Layout

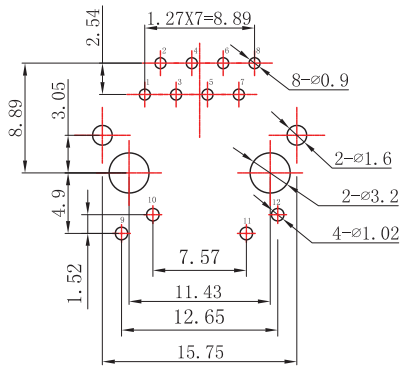


Order Information:

| SK02- | 11 | 1 | 006 | NL | -(Y/N) |
|---|---|---|---|---|---|
| A | B | C | D | E | F |

A: It stands for the RJ45 designer:Such as SK or Other,01or 02 stands for as followig:01=Tab up，02=Tab down
B: The parts are single or multi-ports: such as SK01-11xxxx, it means 1x1 single port, SK01-21xxxx, means 2x1 or 1x2,it is a dual ports RJ45 filtered connector. "G" the mean is 1000base requirement.
C: Tells it is a LEDs version or not, "1" means with LEDs, "0"or else there is without LEDs.
D: It stands for the Parts's series No.
E: NL=RoHS Complaint.
F: Contact Plating Code: Normal type is No Mark, it stands the Contact Area of Contact Pin is 6U″ Gold Plating. More than 6U″ need Mark 15 or 30 or 50.etc.

# SK02-111006NL

## RJ45

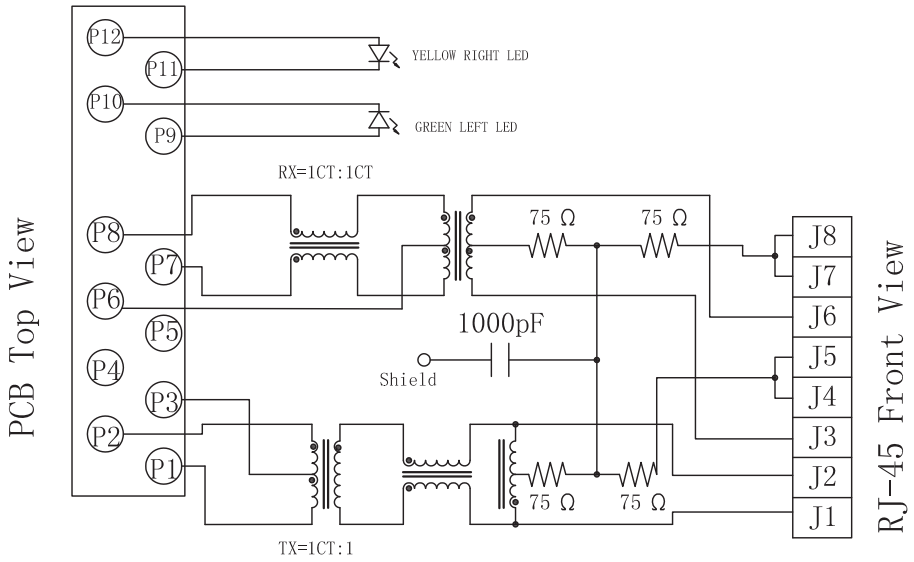


ALL THE RAW MATERIALS MEET RoHS STANDARD

ELECTRICAL SPECIFICATIONS: @25℃ unless otherwose noted

1.0 TURNS RATIO: TX= 1CT:1 ±5%
RX=1CT:1CT ±5%
2.0 OCL : 350uH MIN @0.1V,100KHZ,8mA DC BIAS
3.0 Cww: 28 pF Max
4.0 L.L : 0.4 uH MAX
5.0 Rise Time:
10-90% 2.5 nS Typ
6.0 RETURN LOSS: 30MHZ :-16dB MIN
40MHZ :-14dB MIN
50MHZ :-13.5dB MIN
60MHZ :-13dB MIN
80MHZ :-10dB MIN
7.0 INSERTION LOSS:
0.3 MHZ TO 100MHZ :-1.15dB MAX
8.0 HI-POT : 1500Vrms 6s
9.0.Cross Talk: 0.3MHZ TO 30 MHZ :-40dB MIN
30 MHZ TO 60 MHZ :-35dB MIN
60 MHZ TO 100 MHZ :-30dB MIN
10.CMR: 1 MHZ TO 30 MHZ :-30 dB Min
30 MHZ TO 60 MHZ :-25 dB Min
60 MHZ TO 125 MHZ :-20 dB Min