Current Transducer HAL 200-S

I_{PN} = 200 A

For the electronic measurement of DC, AC and pulsed currents, with a galvanic isolation between the primary (high power) circuit and the secondary (electronic) circuit.

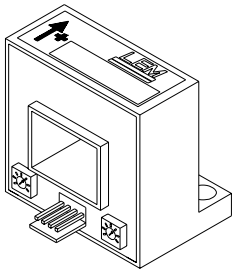

Electrical data

I_{PN}	Primary nominal DC or rms current	200	A
I_P	Primary current, measuring range	0 .. ± 600	A
$\hat{I}_P$	Overload capacity (Ampere Turns)	30000	A
V_{OUT}	Analogue output voltage @ ± I_{PN}	± 4	V
R_L	Load resistance T_A = 0 .. + 70°C	> 1	kΩ
	T_A = - 25 .. + 85°C	> 3	kΩ
V_C	Supply voltage (± 5 %)	± 15	V
I_C	Current consumption (max)	25	mA
V_b	Rms rated voltage[1]	500	V
V_d	Rms voltage for AC isolation test, 50 Hz, 1 mn	3	kV
R_{is}	Isolation resistance @ 500 V_{DC}	> 500	MΩ

Accuracy - Dynamic performance data

X	Accuracy [2] @ I_{PN}, T_A = 25°C, @ ± 15 V	± 1	%
ε_L	Linearity [2]	± 0.5	%
		Max	
V_{OE}	Electrical offset voltage @ I_P = 0, T_A = 25°C	± 10	mV
V_{OM}	Residual offset voltage @ I_P = 0		
	after an overload of 3 x I_{PN}	± 10	mV
V_{OT}	Thermal drift of offset voltage T_A = - 25 .. + 85°C	± 1	mV/°K
$TC\varepsilon_G$	Thermal drift of gain T_A = - 25 .. + 85°C	± 0.05	%/°K
t_r	Response time @ 90 % of I_P	< 3	µs
di/dt	di/dt accurately followed	> 50	A/µs
f	Frequency bandwidth (- 3 dB) [3]	DC .. 50	kHz

General data

T_A	Ambient operating temperature	- 25 .. + 85	°C
T_S	Ambient storage temperature	- 25 .. + 85	°C
m	Mass	75	g
	Standards Safety	EN50178 (1994)	
	EMC	EN50082-2 (1992)	
		EN50081-1 (1992)	
	Deviation in output when tested to EN 61000-4-6	< 10	% of I_{PN}
	Deviation in output when tested to EN 61000-4-4	< 10	% of I_{PN}

Features

- Open loop transducer using Hall Effect
- Panel mounting - Horizontal or Vertical
- Insulated plastic case to UL 94-V0.

Advantages

- Very good linearity
- Very good accuracy
- Low temperature drift
- Wide frequency bandwidth
- Very low insertion losses
- High immunity to external interference
- Current overload capability
- Low power consumption
- Wide dynamic range, 50 to 600 A in one package.

Applications

- AC variable speed drives and servo motor drives
- Static converters for DC motor drives
- Battery supplied applications
- Uninterruptable Power Supplies (UPS)
- Switched Mode Power Supplies (SMPS)
- Power supplies for welding applications.

Notes : [1] Reinforced insulation, Overvoltage Category II, Pollution Degree 2

[2] Excludes the electrical offset

[3] Refer to derating curves in the technical file to avoid excessive core heating at high frequency

001114/2

Dimensions HAL 200-S (in mm. 1 mm = 0.0394 inch)

Bottom view

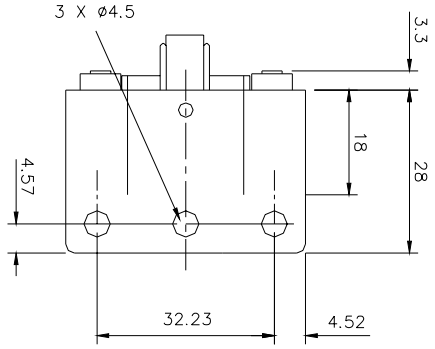

Left view

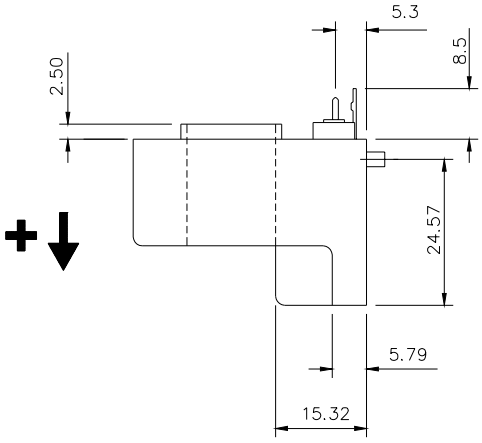

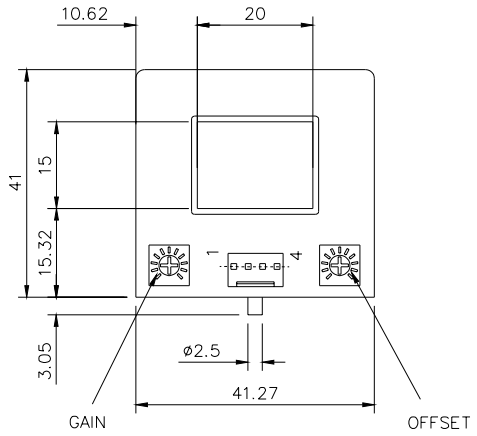

Front view

Secondary terminals

Terminal 1	: supply voltage + 15 V
Terminal 2	: supply voltage - 15 V
Terminal 3	: output
Terminal 4	: 0V

Mechanical characteristics

• General tolerance	± 0.5 mm
• Primary through-hole	20 mm x 15 mm
• Connection of secondary	Molex 5045-04-A

Remarks

- $\mathbf{V}_{OUT}$ is positive when $\mathbf{I}_P$ flows in the direction of the arrow.
- Temperature of the primary conductor should not exceed 90°C.
- This is a standard model. For different versions (supply voltages, secondary connections, unidirectional measurements, operating temperatures, etc.) please contact us.

LEM have a policy of continual product improvement and the company reserves the right to revise the above specification without prior notice.