DS1001-01 SERIES

DIP IC SOCKET PITCH 2.54mm(0.100")

ZHENQIN

MATERIAL

- Insulator:Thermoplastic(UL 94V-0)
- Contact:Copper Alloy
- Contact Plated:See ordering information

SPECIFICATION

- Storage Temperature:-20~70℃
- Operating Temperature:0~85℃
- Contact Resistance:20m Ω max.(initial)
- Insulation Resistance:1,000M Ω min.
- Dielectric Withstanding Voltage:AC1,000V per minute

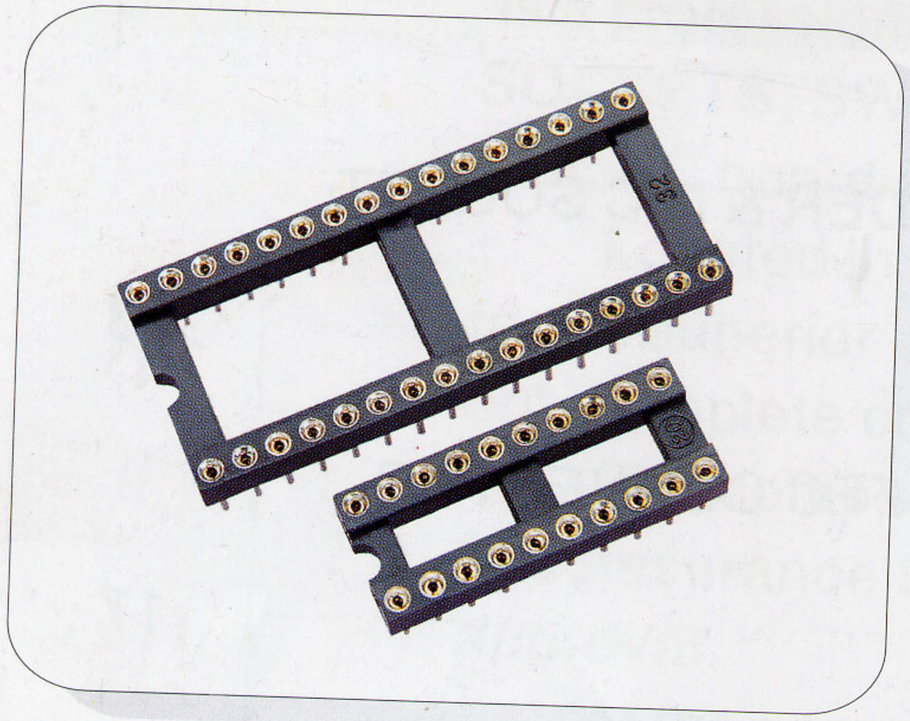

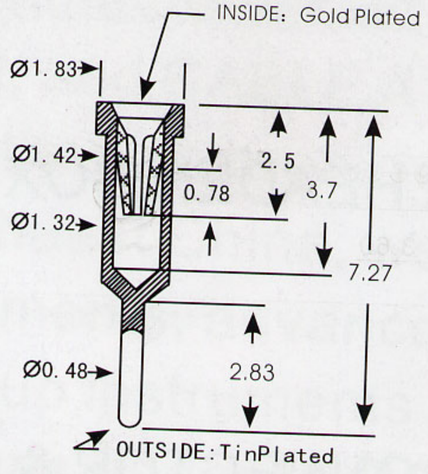

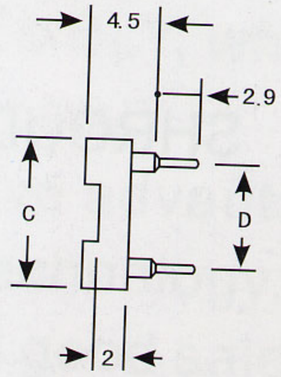

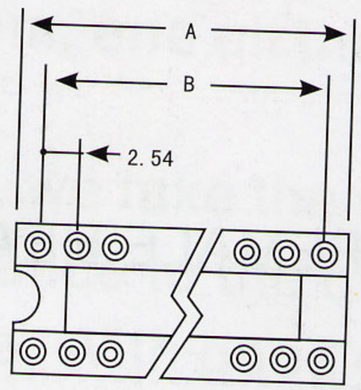

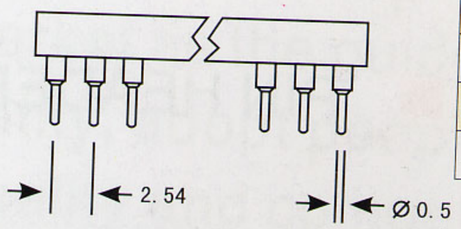

Position	Dimension			
	A	B	C	D
06	7.62	5.08	10.16	7.62
08	10.16	7.62	10.16	7.62
14	17.78	15.24	10.16	7.62
16	20.32	17.78	10.16	7.62
18	22.86	20.32	10.16	7.62
20	25.40	22.86	10.16	7.62
24	30.48	27.94	10.16	7.62
28	35.56	33.02	10.16	7.62
24	30.48	27.94	17.78	15.24
28	35.56	33.02	17.78	15.24
32	40.64	38.10	17.78	15.24
40	50.80	48.26	17.78	15.24

UNIT:mm

Ordering Information

Series No.	No.of Contacts	Contact Type	Application	Terminal Outer Plating	Width	Housing Material	Terminal Inner Plating	Central support
DS1001	32	B	S	T1	N	S	F6	S
	06 20 08 24 14 28 16 32 18 40	B:4 Fingers	S:Solder	T1: 100μ" Min Sn/Pb overall 50μ" Niunerpltea	N:7.62mm(06~24P) W:15.24mm(24~40p)	S:PBT	F6:3μ" Gold	S: W/ Central support X: W/O Central support