THIS DRAWING IS UNPUBLISHED. RELEASED FOR PUBLICATION -
© COPYRIGHT 19 BY TYCO ELECTRONICS CORPORATION. ALL RIGHTS RESERVED.

LOC	DIST
AP	-

REVISIONS

P	LTR	DESCRIPTION	DATE	DWN	APVD
	0	RELEASE	10JUN99	MLO	PLF
	A1	REVISED BY EC 237/99	30JUN99	PLF	MLO
	B	REVISED BY ECR-05-008964	15AUG2005	MAS	PLF

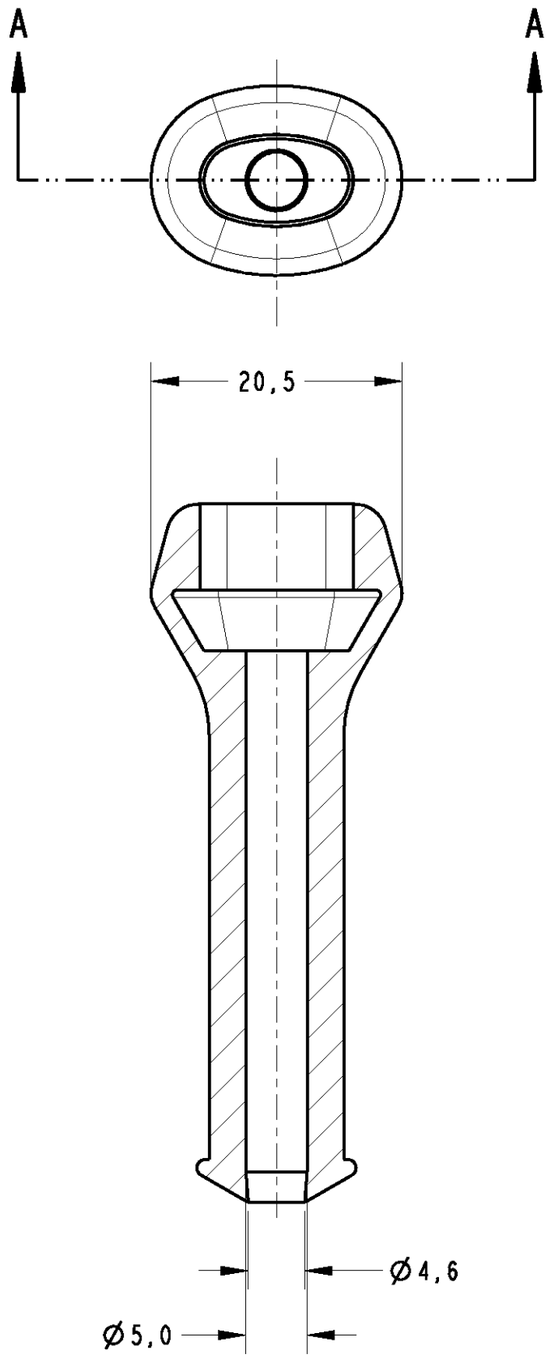

SECTION A-A

(B) △1 - ELASTÔMERO SAE J200, 2BC 414, A14, B14, C12, E014, F17, Z1
Z1=RESISTÊNCIA RASGO, ASTM D624 - 20kg/cm MIN.

(B) △2 - ELASTÔMERO SAE J200, 2BC 514, A14, B14, C12, E014, F17, Z1
Z1=RESISTÊNCIA RASGO, ASTM D624 - 20kg/cm MIN.

△1 -ELASTOMER SAE J200, 2BC 414, A14, B14, C12, E014, F17, Z1
Z1= TEAR RESISTANCE, ASTM D624 -20kg/cm MIN.

△2 -ELASTOMER SAE J200, 2BC 514, A14, B14, C12, E014, F17, Z1
Z1= TEAR RESISTANCE, ASTM D624 -20kg/cm MIN.

	FINISH	HARDNESS	MATERIAL	PART NUMBER
	PRETO/BLACK	40±5 SHORE A	ELASTOMER △1	880810-2
(B)	PRETO/BLACK	50±5 SHORE A	ELASTOMER △2	880810-1

THIS DRAWING IS A CONTROLLED DOCUMENT FOR TYCO ELECTRONICS CORPORATION IT IS SUBJECT TO CHANGE AND THE CONTROLLING ENGINEERING ORGANIZATION SHOULD BE CONTACTED FOR THE LATEST REVISION.

DIMENSIONS: mm

TOLERANCES UNLESS OTHERWISE SPECIFIED:
0 PLC ±-
1 PLC ±0,3
2 PLC ±-
3 PLC ±-
4 PLC ±-
ANGLES ±1°

MATERIAL SEE TABLE
FINISH SEE TABLE

CAD Pro-E
DO NOT REVISE EXCEPT BY CAD

DWN M.L.OGAWA 09JUN99
CHK P.L.FARIA 10JUN99
APVD J.M.M.NETO 10JUN99
PRODUCT SPEC -
APPLICATION SPEC -
WEIGHT -

AMP
AMP do Brasil LTDA.
São Paulo , Brasil

NAME
COVER CAP 2 POSN
-
-

SIZE	CAGE CODE	DRAWING NO	RESTRICTED TO
A3	00779	C-880810	-

CUSTOMER DRAWING

SCALE 2:1 SHEET 1 OF 1 REV B