Mechanical:

REV.	ECN NO.	DESCRIPTION	DATE	APPD
A	REL		2008/11/10	

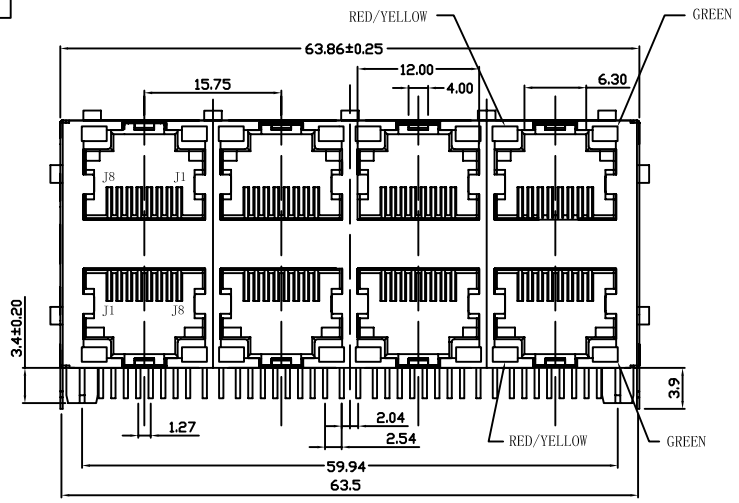

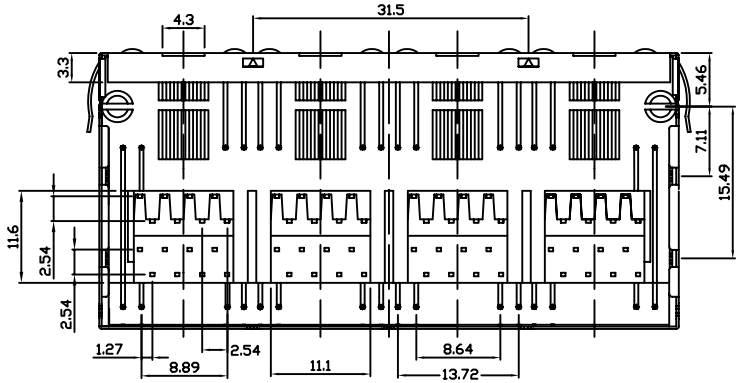

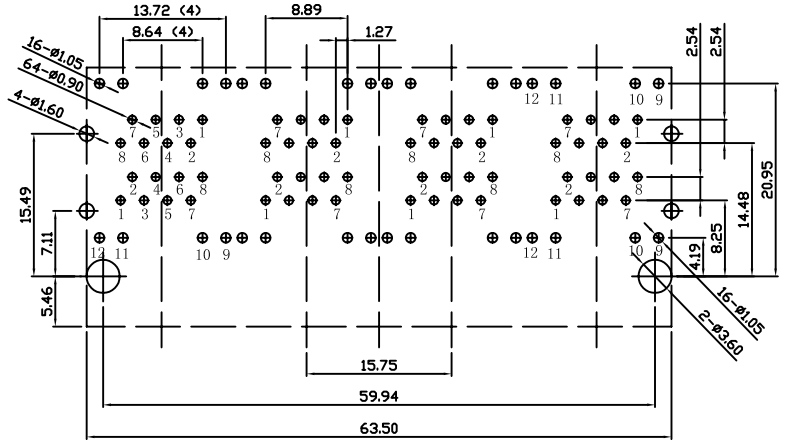

SUGGESTED PCB LAYOUT(TOP VIEW)

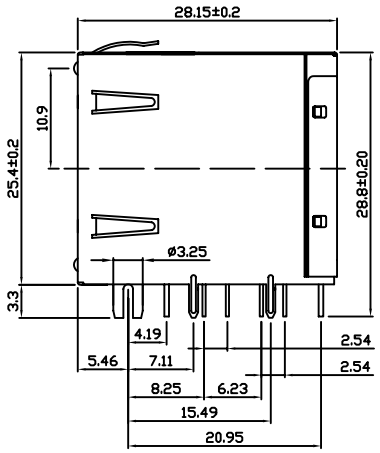

LPJE108XA62NL

Gold Plating	"X"
1.5u"	1
3u"	2
6u"	3
15u"	4
30u"	5
50u"	6

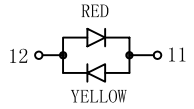

LEFT LED



RIGHT LED

NOTES:

MACHANICAL:

1. HOUSING MATERIAL :GLASS FILLED POLYESTER OR HIGH TEMP. UL94V-0.
2. CONTACT MATERIAL :PHOSPHOR BRONZE t=0.35mm.
3. PLATING :CONTACT AREA-SELECTIVE GOLD PLATING. TAILS-PLATED TIN OVER NICKEL.
4. OPERATING LIFE :750 CYCLES MIN
5. PCB RETENTION PRE-SOLDER :1 LB MIN
6. PCB RETENTION POST-SOLDER :10 LBS MIM
7. LED SIZE :3.2*2.0*4.0*P=2.29mm

ELECTRICAL:

1. VOLTAGE RATING :125VAC RMS.
2. CURRENT RATING :1.5AMP.
3. CONTACT RESISTANCE :50 MILLIOHMS MAX.
4. INSULATION RESISTANCE :1000MEGOHMS MIN @ 500V DC.
5. DIELECTRIC STRENGTH :1000V AC RMS 60Hz. 1MIN.

ENVIRONMENTAL:

1. STORAGE :-40℃～+85℃.
2. OPERATION :-40℃～+85℃.

MATES WITH MODULAR PLUG CONFORMING TO FCC PART 68, SUBPART F.

RoHS 2002/95/EC

X:X ±0.20	APPD:	LINK-PP INT'L TECHNOLOGY CO., LIMITED	
X:XX ±0.10	CHKD:	TITLE: 2×4 SIDE ENTRY PCB JACK WITH SHIELD	
X:XXX ±0.05	DR: TOM		
ANGLES ±1°	UNIT: mm	PART NO.: LPJE108XA62NL	
	SCALE: 2/1	SHEET: 1/1	REV: A
		DWG NO.: LP08111010	