COPYRIGHT 2000 BY TYCO ELECTRONICS CORPORATION. ALL RIGHTS RESERVED.

REVISIONS / ABANDERUNG				
SYM	LTR	DESCRIPTION / BESCHREIBUNG	DATE	DWN	APVD
	A1	EGO-0803-01	19JAN2001	NG	GF

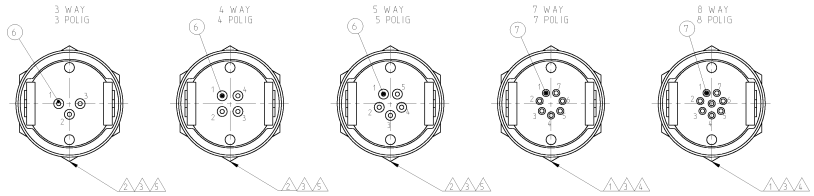

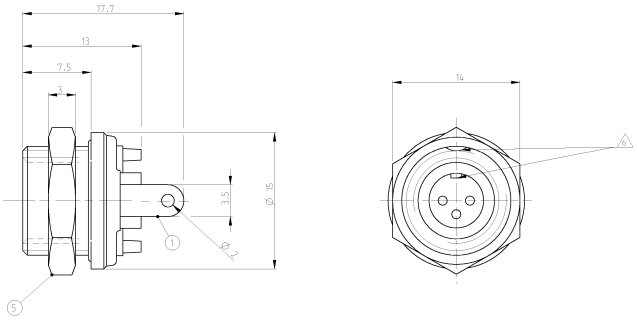

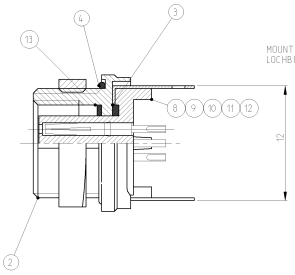

MOUNTING HOLE DIMENSION
LOCHBILD FUER MONTAGE

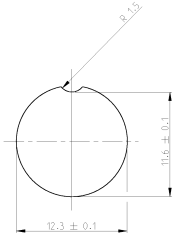

MATERIAL / MATERIAL: PBT, UL-94 V2 SHELL MATERIAL / GEHAEUSEMATERIAL: CUZN FINISH / BESCHICHTUNG: TRIBOR 4 µm	7
CODING / KODIERUNG	6
WIRE GAGE / DRAHTGROESSE IN mm^2: 0.25	5
WIRE GAGE / DRAHTGROESSE IN mm^2: 0.14	4
CONTACT RESISTANCE / KONTAKTWIDERSTAND: => 5 mΩ	3
RATED CURRENT PER CONTACT / NENNSTROM PRO KONTAKT: 3 A	2
RATED CURRENT PER CONTACT / NENNSTROM PRO KONTAKT: 1 A	1
SHELL PROTECTION CLASS / SCHUTZKLASSE:IP 65 / DIN 40050	
TERMINATION: SOLDERING / VERBINDUNG: LOETKONTAKTE	
TEST VOLTAGE / PRUEFSPANNUNG: 500 VAC	
OPERATING VOLTAGE / BETRIEBSSPANNUNG: 60 VAC	
OPERATING TEMPERATURE: -40°C TO +80°C / ARBEITSTEMPERATUR: -40°C BIS +80°C	
MATING CYCLES / STECKZYKLEN: 500 MAX.	
TECHNICAL DATA TECHNISCHE DATEN	

TYCO-NO. / TYCO NR.						
0-1437720-9	0-1437720-6	0-1437720-3	9-1437719-9	9-1437719-6		
1	1	1	1	1	SEAL / DICHTUNG	13
1					INSULATION TUBE 8 POS. / ISOLIERHUELSE 8 POL.	12
	1				INSULATION TUBE 7 POS. / ISOLIERHUELSE 7 POL.	11
		1			INSULATION TUBE 5 POS. / ISOLIERHUELSE 5 POL.	10
			1		INSULATION TUBE 4 POS. / ISOLIERHUELSE 4 POL.	9
				1	INSULATION TUBE 3 POS. / ISOLIERHUELSE 3 POL.	8
8	7				SOCKET APPLIED BY PRESSURE / BUCHSENKONTAKT EINGEPRESST	7
		5	4	3	SOCKET APPLIED BY PRESSURE / BUCHSENKONTAKT EINGEPRESST	6
1	1	1	1	1	NUT / MUTTER	5
1	1	1	1	1	SEAL / DICHTUNG	4
1	1	1	1	1	SEAL / DICHTUNG	3
1	1	1	1	1	HOUSING / GEHAEUSE	2
1	1	1	1	1	GROUND ON PCB SPRING / VERBINDUNGSFEDER ZUR PCB MASSE	1
-	-	-	-	-	REVISION OF EACH ASSY NO. (WHEN BLANK, USE DWG REV.)	
QTY REQD PER ASSY					DESCRIPTION / BESCHREIBUNG	ITEM-NO. TEIL-NR.
T01-0580-508	T01-0580-507	T01-0580-505	T01-0580-504	T01-0580-503	PARTS LIST / TEILE LISTE	
CATALOG-NO.	CATALOG-NO.	CATALOG-NO.	CATALOG-NO.	CATALOG-NO.		

AS SHOWN
9-1437719-6 WIE GEZEICHNET

DRN: M.GEISTER 19JAN2001 CHK: H.SCHERER 19JAN2001 APV: G.KELDENICH 19JAN2001	tyco Electronics	tyco Electronics AMP GmbH D - 64625 Bensheim	
MATERIAL: -	PROJECT TYPE: PRODUKTGRUPPE: -	NAME: T01 FEMALE PLUG CONN.PANEL MNT.SOLDER VER. 3-8 POS. 180 DGR. T01 BUCHSENSTECKER,EINBAULOETVERSION 3-8 POL.180 GRAD	
FINISH: -	APPLICATION SPEC: ANWENDUNGSBERICHT: -		
	WEIGHT: -	SIZE: A1 / CODE IDENT: 00779 / DRAWING NO: 9-1437719-6	RESTRICTED TO NOR PERM: -
		CUSTOMER DRAWING / KUNDENZEICHNUNG	SCALE: NEGATIVE - / SHEET: 1 OF 1 / REV: A1

AMP 4005 REV 31MAR2000
ProENGINEER DRAWING

Downloaded from Datasheet.su